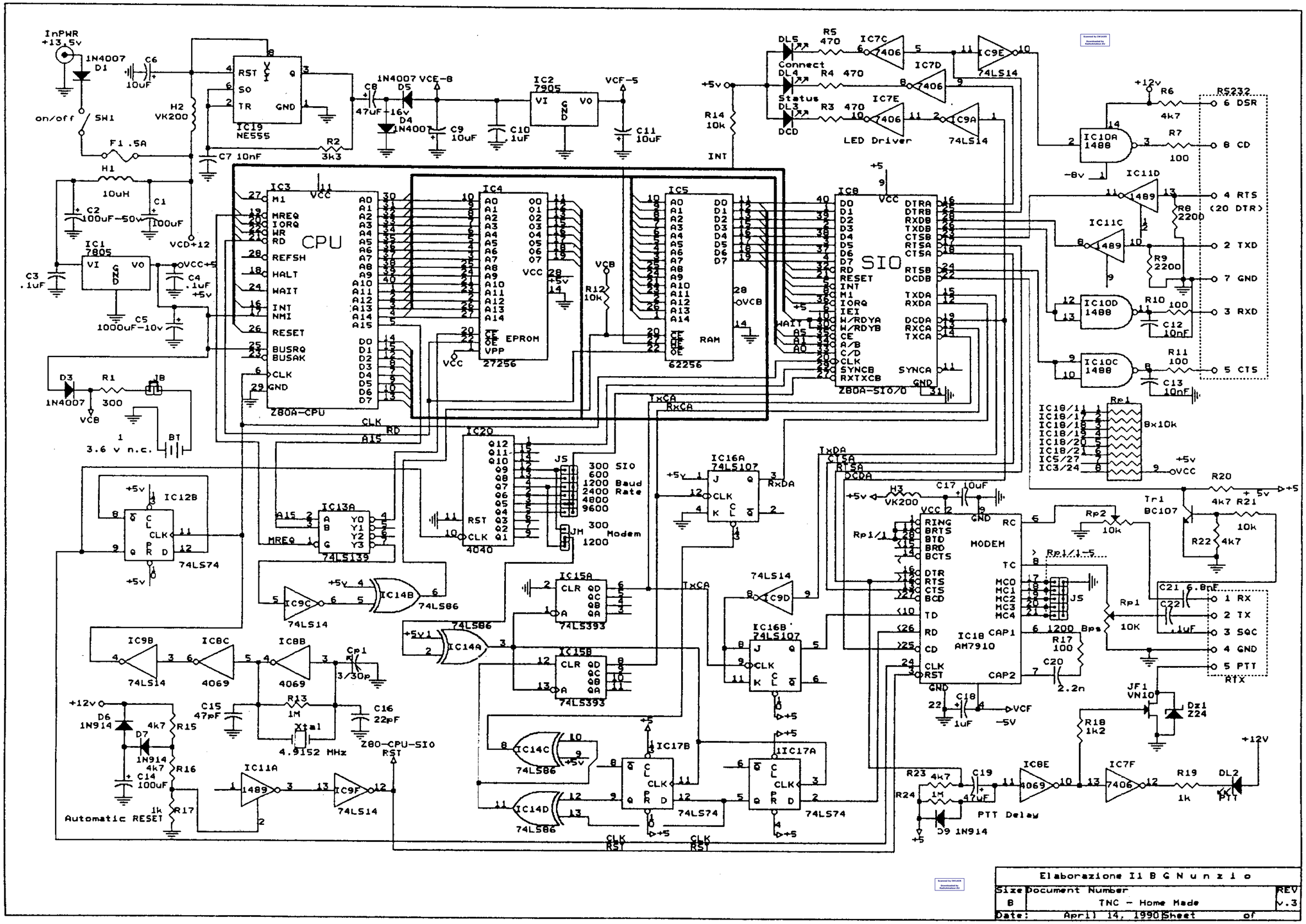
InPWR +13.5v
1N4007 D1
C6 10uF
on/off SW1
F1 .5A
H2 VK200
H1 10uH
C1 100uF
C2 100uF-50v
IC1 7805
C3 .1uF
C4 .1uF +5v
C5 1000uF-10v
VCD+12
VCC+5
IC19 NE555
RST SO TR GND Q
R2 3k3
C7 10nF
C8 47uF-16v
1N4007 D5
D4 1N4007
VCE-8
C9 10uF
C10 .1uF
IC2 7905
VI VO GND
VCF-5
C11 10uF
R14 10k
INT
IC3 CPU
Z80A-CPU
M1 MREQ IORQ WR RD REFSH HALT WAIT INT NMI RESET BUSRQ BUSAK CLK GND
A0 A1 A2 A3 A4 A5 A6 A7 A8 A9 A10 A11 A12 A13 A14 A15
D0 D1 D2 D3 D4 D5 D6 D7
IC4 EPROM 27256
IC5 RAM 62256
R12 10k
VCB
IC8 SIO Z80A-SIO/0
DTRA DTRB RXDB TXDB CTSB RTSB CTSA RTSA DCDB TXDA RXDA DCDA RXCA TXCA SYNCA
RESET INT M1 IORQ IEI W/RDYA W/RDYB CE A/B C/D CLK SYNCB RXTXCB
D3 1N4007
R1 300
VCB
IB
BT 3.6 v n.c.
IC12B 74LS74
IC13A 74LS139
IC20 4040
JS 300 600 1200 2400 4800 9600 SIO Baud Rate
JM 300 1200 Modem
IC9C 74LS14
IC14B 74LS86
IC14A 74LS86
IC15A 74LS393
IC15B 74LS393
IC9B 74LS14
IC8C 4069
IC8B 4069
Cp1 3/30p
C15 47pF
R13 1M
Xtal 4.9152 MHz
C16 22pF
Z80-CPU-SIO
D6 1N914
R15 4k7
D7 1N914
R16 4k7
C14 100uF
R17 1k
Automatic RESET
IC11A 1489
IC9F 74LS14
IC14C 74LS86
IC14D 74LS86
IC17B 74LS74
IC17A 74LS74
IC16A 74LS107
IC16B 74LS107
IC9D 74LS14
DL5 Connect
DL4 Status
DL3 DCD
R5 470
R4 470
R3 470
IC7C 7406
IC7D 7406
IC7E 7406
LED Driver
IC9E 74LS14
IC9A 74LS14
R6 4k7
IC10A 1488
R7 100
IC11D 1489
IC11C 1489
R8 2200
R9 2200
IC10D 1488
R10 100
C12 10nF
IC10C 1488
R11 100
C13 10nF
RS232
6 DSR
8 CD
4 RTS (20 DTR)
2 TXD
7 GND
3 RXD
5 CTS
Rp1 8x10k
H3 VK200
C17 10uF
IC18 AM7910 MODEM
RING BRTS BTD BRD BCTS DTR RTS CTS BCD TD RD CD CLK RST
RC TC MC0 MC1 MC2 MC3 MC4 CAP1 CAP2
Rp2 10k
Rp1 10K
R17 100
C20 2.2n
C18 1uF
Tr1 BC107
R20 4k7
R21 10k
R22 4k7
C21 6.8nF
C22 .1uF
1 RX
2 TX
3 SQC
4 GND
5 PTT
RTX
JF1 VN10
Dz1 Z24
R18 1k2
IC8E 4069
IC7F 7406
R19 1k
DL2 PTT
R23 4k7
R24 1M
C19 47uF
D9 1N914
PTT Delay
Elaborazione I1 B G N u n z i o
Size B
Document Number
TNC - Home Made
REV v.3
Date: April 14, 1990 Sheet of